TIA/EIA/IS-968
(FCC PART 68)

LABORATORY
MEASUREMENT REPORT No. 10174

ITL Ltd. authorises the above named company to reproduce this Report provided it is reproduced in its entirety.

Table of Contents

INTRODUCTION **4**

LIST OF APPENDED INFORMATION **5**

4.2 (68.302) ENVIRONMENTAL SIMULATION **6**

4.2.1 (68.302(A)) SHOCK (UNPACKAGED) **6**

4.2.2.1 (68.302(B)(1)) TELEPHONE LINE SURGE – TYPE A. METALLIC **7**

4.2.2.2 (68.302(B)(2)) TELEPHONE LINE SURGE – TYPE A. LONGITUDINAL **7**

4.2.3.1 (68.302(C)(1)) TELEPHONE LINE SURGE – TYPE B. METALLIC **8**

4.2.3.2 (68.302(C)(2)) TELEPHONE LINE SURGE – TYPE B. LONGITUDINAL **8**

4.2.4 (68.302(D)) POWER LINE SURGE **9**

4.3 (68.304) LEAKAGE CURRENT LIMITATIONS **10**

4.4 (68.306) HAZARDOUS VOLTAGE LIMITATIONS ..... ERROR! BOOKMARK NOT DEFINED.

4.4.1.3 (68.306(A)(2)) TYPE II E&M LEADS ..... ERROR! BOOKMARK NOT DEFINED.

4.4.1.4 (68.306(A)(3)) OFF-PREMISES STATION VOLTAGES (OPS) ..... ERROR! BOOKMARK NOT DEFINED.

4.4.1.5 (68.306(A)(4)) DIRECT INWARD DIALING (DID) ..... ERROR! BOOKMARK NOT DEFINED.

4.4.1.6 (68.306(A)(5)) LOCAL AREA DATA CHANNEL INTERFACE (LADC) **11**

4.4.2 (68.306(B)(1) PHYSICAL SEPARATION OF LEADS **12**

4.4.3 (68.306(B)(2), (3) (4) AND (C)) NON-HAZARDOUS VOLTAGE PROTECTION **13**

4.4.4 (68.306(D)) RINGING SOURCES ..... ERROR! BOOKMARK NOT DEFINED.

4.5 (68.308) SIGNAL POWER LIMITATIONS **14**

4.5.2.1 (68.308(B)(1)) VOICEBAND METALLIC SIGNAL POWER (VOICE EQUIPMENT) **14**

4.5.2.2 (68.308(B)(2)) VOICEBAND SIGNAL POWER (NETWORK CONTROL SIGNALS) **14**

4.5.2.3 (68.308(B)(4)) VOICEBAND SIGNAL POWER (DATA EQUIPMENT) **15**

4.5.3 (68.308(C)) SIGNAL POWER IN THE 3995 - 4005 HZ FREQUENCY BAND **17**

4.5.5.1 (68.308(E)(1)) METALLIC VOLTAGE, 4 KHZ TO 6 MHZ **17**

THE UNIT MEETS REQUIREMENTS **17**

4.5.4 (68.308(D)) LONGITUDINAL VOLTAGE AT FREQUENCIES BELOW 4KHZ 18

4.5.5.2 (68.308(E)(2)) LONGITUDINAL VOLTAGE, 4 KHZ TO 6 MHZ 18

4.5.6 (68.308(F)) LADC INTERFACE 19

4.5.6.1 (68.308(F)(1)) METALLIC VOLTAGES – FREQUENCIES BELOW 4 KHZ 19

4.5.6.2 (68.308(F)(2)) METALLIC VOLTAGES – FREQUENCIES ABOVE 4 KHZ – LADC INTERFACE 20

4.5.6.3 (68.308(F)(3)) LONGITUDINAL VOLTAGE– LADC INTERFACE 21

4.6 (68.310) TRANSVERSE BALANCE LIMITATIONS 22

4.6.2 (68.310(B)) ANALOG VOICEBAND EQUIPMENT 22

4.7 (68.312) ON-HOOK IMPEDANCE LIMITATIONS 23

4.7.2.1 (68.312(B)(1)) DC ON-HOOK IMPEDANCE 23

4.7.2 DC CURRENT AND AC IMPEDANCE (LOOP-START) DURING SIMULATED RINGING 25

4.7.3.2 (68.312(B)(2)) (68.312(C)) AC IMPEDANCE DURING SIMULATED RINGING 25

IMPEDANCE TO GROUND DURING RINGING 25

4.7.5 (68.312(D)) MAXIMUM RINGER EQUIVALENCE 26

4.8 (68.314) BILLING PROTECTION 27

4.8.1 (68.314(A)) CALL DURATION REQUIREMENTS 27

4.8.2 (68.314(B)) VOICE AND DATA EQUIPMENT ON-HOOK SIGNAL REQUIREMENTS 28

4.8.3 (68.314(C)(1)) VOICE AND DATA EQUIPMENT LOOP CURRENT REQUIREMENTS FOR EQUIPMENT CONNECTED TO THE PUBLIC SWITCHED NETWORK 29

4.8.4.1 (68.314(D)(1)) SIGNALING INTERFERENCE REQUIREMENTS 30

INTRODUCTION

Test Site:

I.T.L (Product Testing) Ltd.
1 Bat Sheva St. POB 87, Lod 71100, Israel
TEL: 972-8-9153100
FAX: 972-8-9153101

Equipment Tested:

Manufacturer:	Visonic Ltd.
Address:	30 Habarzel St., POB 22020, Tel-Aviv, 61220, Israel
Model or Part No.:	Wireless alarm control system AMBERGSAL
Serial No.:	N/A
Date Submitted:	12.01.2011
Date Completed:	15.01.2011

Tested By:

Signature:

Name (please print): **S. Beloborodov**

Approved by:

Siganature:

Name (please print): **I. Cohen**

List of Appended Information

Appendix 1: ITL Equipment List

ITL	Instrument	Manufacturer	Model	Serial	CalLast
1102	Filter	Krohn-Hite	3202	6638	30/11/2010
1096	Balance Analyzer	CDI	BA100	4130	30/11/2010
1097	Wide Band Receiver	CDI	WBR-100	3531	30/11/2010
1093	DMM	Fluke	87	65290562	30/11/2010
1099	AC Stress Analyzer	CDI	HVC	3167	30/11/2010
1073	Surge Generator	CDI	CDI 1000i	3153	30/11/2010
1116	Digital Oscilloscope	Tektronix	TDS210	B050825	30/11/2010
1147	Osciloscope	Tektronix	TDS3012	B015205	30/11/2010
1106	Spectrum analyzer	TiePie Engineering	HS508	-	-
1395	Network Tester	W&G	ANT-20	AS-0168	30/11/2010

Remarks

The equipment list was attached to the report during the test

4.2 (68.302) Environmental Simulation

4.2.1 (68.302(a)) Shock (unpackaged)

Test Equipment:
Requirements: Unit shall not cause harm after drop shock.

Equipment category:

N/A	Hand-held items normally used at head height: **18** random drops from a height of 60 inches onto concrete covered with 1/8" asphalt tile or similar surface.

Notes: No such equipment

N/A	Table (desk) top equipment 0-5 kg: **6** random drops from a height of 30 inches onto concrete covered with 1/8" asphalt tile or similar surface.

Notes: No such equipment.

4.2.2.1 (68.302(b)(1)) Telephone Line Surge – Type A. Metallic

Test Equipment: 1073

Two 800 Volt, 10 x 560 μsec surges, of alternate polarity were applied across the lead pairs indicated below.

Test Points Between	On-Hook		Off-Hook	
	Norm	Rev.	Norm	Rev.
Tip to Ring	Pass	Pass	Pass	Pass

Notes: No damage

4.2.2.2 (68.302(b)(2)) Telephone Line Surge – Type A. Longitudinal

Test Equipment: 1073

One of 1500 Volt surge of each polarity (10 x 160 μsec) was applied between the lead pairs listed below:

Test Points Between	On-Hook		Off-Hook	
	Norm	Rev.	Norm	Rev.
Tip & Ring to GND	NA	NA	NA	NA

Notes: No connection to Ground

4.2.3.1 (68.302(c)(1)) Telephone Line Surge – Type B. Metallic

Test Equipment: 1073

One of 1000 Volt, 9 x 720 μsec surge of each polarity was applied across the lead pairs indicated below.

Test Points Between	On-Hook		Off-Hook	
	Norm	Rev.	Norm	Rev.
Tip to Ring	Pass	Pass	Pass	Pass

Notes: No damage

4.2.3.2 (68.302(c)(2)) Telephone Line Surge – Type B. Longitudinal

Test Equipment: 1073

One of 1500 Volt surge of each polarity (9 x 720 μsec) was applied between the lead pairs listed below:

Test Points Between	On-Hook		Off-Hook	
	Norm	Rev.	Norm	Rev.
Tip & Ring to GND	NA	NA	NA	NA

Notes: No such connection

4.2.4 (68.302(d)) Power Line Surge

Test Equipment: 1073

Requirements: Unit shall not cause harm to the network after test.

NA	Not applicable to this unit
NA	Six 2500 Volt surges of alternate polarity (three surges of each polarity) were applied between the phase and neutral terminals of the input AC power line in all equipment states.

Notes: Unit powered by external power supply. External power supply adapter is not part of this investigation.

4.3 (68.304) Leakage Current Limitations

Test Equipment: 1093, 1099

Requirements: The leakage current shall not exceed 10mA peaks at any time during 90-second interval.

The unit was subjected to leakage tests. Listed below are the lead pairs selected and the currents measured. The highest of on-hook and off-hook readings are shown.

Lead categories:

(a) All telephone connections
(b) All power connections
(c) All possible combinations of exposed conductive surfaces on the exterior of such equipment, excluding
terminals for connection to other equipment
(d) All terminals for connection to registered protective circuitry or non-registered equipment
(e) All auxiliary lead terminals
(f) All E & M lead terminals
(g) PR/PC and CY1 and CY2 leads

Lead Pair	Category	AC Voltage (V)	Before ENV Stress Current (mA)	After ENV Stress Current (mA)
Telephone line	a	1500	0.05	0.05

Notes: The unit meets requirements

4.4.1.6 (68.306(a)(5)) Local Area Data Channel Interface (LADC)

Test Equipment:

NA	Not applicable to this unit

Parameter		Between T - R	Between T - Ground	Between R- Ground	For 4 Wire Interfaces		
					Between T_1- R_1	Between T_1- Ground	Between R_1 - Ground
1.	DC Current						
2.	AC Current						
3.	DC Volt	N/A			N/A		
4.	AC Peak	N/A			N/A		
5.	AC Peak & DC Volt	N/A			N/A		
6.	AC Peak with other interface leads shorted to ground	N/A			N/A		

Notes: _____

4.4.2 (68.306(b)(1) Physical Separation of Leads

Observations:

4.4.3 (68.306(b)(2), (3) (4) and (c)) Non-Hazardous Voltage Protection

Test Equipment:

NA	Not applicable to this unit

Terminal Connections	AC Voltage	Lead Pairs	Hazardous Voltage after 1 sec

Notes:

Non-Hazardous Voltage Connections: A voltage source is considered as non-hazardous according to 68.302 and 68.304 (b) requirement

4.5 (68.308) Signal Power Limitations

4.5.2.1 (68.308(b)(1)) Voiceband Metallic Signal Power (Voice Equipment)

Test Equipment: 1097, 1102, 1106

Requirements: The power of all signal energy in the 200-3995 Hz voiceband shall not exceed –9dBm.

Mode	Before ENV Stress Signal Level (dBm)	After ENV Stress Signal Level (dBm) (if different)
Connected	-12.2dBm	-12dBm

Notes:

4.5.2.2 (68.308(b)(2)) Voiceband Signal Power (Network Control Signals)

Test Equipment: 1097, 1102, 1106

Requirements: The maximum power of the frequency band below 3995 Hz signals delivered to a loop simulator circuit shall not exceed the following when averaged over any 3-second interval: 0dBm when used for network control (DTMF); -9dBm in all other cases.

Mode	Before ENV Stress Signal Level (dBm)	After ENV Stress Signal Level (dBm) (if different)
Send DTMF	-10.2 dBm	-10dBm

Notes: The unit meets requirements

4.5.2.3 (68.308(b)(4)) Voiceband Signal Power (Data Equipment)

Test Equipment: 1097, 1102, 1106

Data Equipment Type:
Requirements: Data circuit terminal equipment shall not transmit signals from 200 to 3995 Hz than exceed –9dBm, when averaged over any and all 3-second intervals.

NA	Fixed Loss Loop
NA	Permissive
P	Programmable (Signal Power Sheets Attached)

Mode	Before ENV Stress Signal Level (dBm)	After ENV Stress Signal Level (dBm) (if different)
Send data	-9.3dBm	-9.3dBm

Notes: Maximum level was recorded

4.5.2.6 Return loss test

Test Equipment: 1395

Requirements: For the two-wire interface: $RL \geq$ 9-3log(f/200)/log(2.5)dB; for 200Hz ≤ f ≤ 500Hz

6dB; for 500Hz ≤ f ≤ 3200Hz

For the four-wire interface: $RL \geq$ 3dB

Frequency Hz	2 wire interface		4 wire interface		Pass/Fail
	Measured	Criteria	Measured	Criteria	
200	9	9		3	Pass
300	9	7.7		3	Pass
400	9	6.7		3	Pass
500	9	6		3	Pass
1000	9	6		3	Pass
2000	9	6		3	Pass
3200	9	6		3	Pass

4.5.3 (68.308(c)) Signal Power in the 3995 - 4005 Hz Frequency Band

Test Equipment: : 1097, 1102, 1106

Requirements: Maximum power delivered by the sources in the 3995-4005 Hz band to an appropriate simulator circuit, shall be 18dB below maximum permitted power specified for the voice band.

-33 dBm	Permitted Power	-48 dBm	Measured Power in 3.8 kHz to 4.2 kHz band

The minimum ratio observed between maximum permitted power specified in 68.308(b) and the 4 kHz signals was 15dB over all modes

Notes: The unit meets requirements

4.5.5.1 (68.308(e)(1)) Metallic Voltage, 4 kHz to 6 MHz

Test Equipment: : 1097, 1102, 1106

Range	Before ENV Stress Level (dBV)	After ENV Stress Level (dBV) (if different)	Requirements Max. voltage, dBV
4 to 12 kHz	-38.3	-36.3	-17.78÷-20dBV
12 to 90 kHz	-50.1	-46.5	-20÷-55dBV
90 to 270 kHz	- 60	-60	-55dB
270 kHz to 6 MHz	-50	-50	-15dBV

Notes: The unit meets requirements

4.5.4 (68.308(d)) Longitudinal Voltage at frequencies below 4kHz

Test Equipment: 1097, 1102, 1106

Worst-Case Operating Mode	Before ENV Stress Level (dBV)	After ENV Stress Level (dBV) (if different)	Requirements rms voltage
Off Hook			

Notes: No such equipment

4.5.5.2 (68.308(e)(2)) Longitudinal Voltage, 4 kHz to 6 MHz

Test Equipment: 1097, 1102, 1106

Range	Before ENV Stress Level (dBV)	After ENV Stress Level (dBV) (if different)	Requirements Max. voltage, dBV
4 to 12 kHz			-36.46÷-40dBV
12 to 42 kHz			-40.16÷-62dBV
42 to 270 kHz			-62dBV
270 kHz to 6 MHz			-30dBV

Notes: No such equipment

4.5.6 (68.308(f)) LADC interface
4.5.6.1 (68.308(f)(1)) Metallic voltages – frequencies below 4 kHz

Test Equipment: : 1097, 1102, 1106

NA	Max. voltage +3 dBV
NA	Not applicable to this unit

Range	Before ENV Stress Signal Level (dBm)	After ENV Stress Signal Level (dBm) (if different)

Notes: Not applicable to this unit

4.5.6.2 (68.308(f)(2)) Metallic voltages – frequencies above 4 kHz – LADC interface

Test Equipment: 1097, 1102, 1106

NA	Max. voltage in all 100-Hz bands –6 dBV
NA	Not applicable to this unit

Range	Before ENV Stress Signal Level (dBm)	After ENV Stress Signal Level (dBm) (if different)

Notes: Not applicable to this unit

4.5.6.3 (68.308(f)(3)) Longitudinal voltage– LADC interface

Test Equipment: 1095, 1097,

NA

Not applicable to this unit

Range	Before ENV Stress Signal Level (dBm)	After ENV Stress Signal Level (dBm) (if different)

Notes: Not applicable to this unit

4.6 (68.310) Transverse Balance Limitations
4.6.2 (68.310(b)) Analog voiceband equipment

Test Equipment: 1110, 1102, 1106

Longitudinal balance is shown below for both on-hook states. The off-hook measurements are taken with the loop simulator series resistance (and therefore loop current) varied through the full range, with the minimum level noted. Where environmental stress affects the readings by more than 2 dB, which is the measurement precision, both before and after values are shown.
Requirements: Off-hook balance 40dB in the voice band 200 – 4000Hz;
On-hook balance 60dB in the voice band 200 – 1000Hz and 40dB in the voice band 1000 – 4000Hz.

Frequency (Hz)	Balance (dB)			
	On-Hook		Off-Hook	
	Before ENV	After ENV	Before ENV	After ENV
200	70	70	60	60
500	70	70	60	60
1000	70	70	60	60
2500	60	60	60	60
4000	60	60	60	60

Notes: Unit meets requirement

4.7 (68.312) On-Hook Impedance limitations
4.7.2.1 (68.312(b)(1)) DC On-Hook Impedance

Test Equipment: 1093, 1098

Requirements: The DC resistance between tip and ring conductors, and between each of the tip and ring conductors and ground, shall be greater than 5 MΩ for all DC voltages up to and including 100 volts. The mentioned above resistance shall be greater than 30 kΩ for all DC voltages between 100 and 200 volts.

Voltage	Test Points	Before ENV Stress DC Current (mA)	After ENV Stress DC Current (mA) (if different)	DC Resistance (MΩ)
10	T to R	-	-	None
	T to GND	N/A	N/A	N/A
	R to GND	N/A	N/A	N/A
20	T to R	-	-	None
	T to GND	N/A	N/A	N/A
	R to GND	N/A	N/A	N/A
30	T to R	0.002	-	15
	T to GND	N/A	N/A	N/A
	R to GND	N/A	N/A	N/A
40	T to R	0.006	-	6.6
	T to GND	N/A	N/A	N/A
	R to GND	N/A	N/A	N/A
50	T to R	0.007	0.007	7.14
	T to GND	N/A	N/A	N/A
	R to GND	N/A	N/A	N/A
60	T to R	0.01	0.01	6.0
	T to GND	N/A	N/A	N/A
	R to GND	N/A	N/A	N/A

Notes: Unit is in Off hook state when voltage is below 23Vdc tip to ring. This is a feature of the unit.

4.7.2.1 DC On-Hook Impedance (cont'd)

Voltage	Test Points	Before ENV Stress DC Current (mA)	After ENV Stress DC Current (mA) (if different)	DC Resistance (MΩ)
70	T to R	0.012	0.012	5.8
	T to GND	N/A	N/A	N/A
	R to GND	N/A	N/A	N/A
80	T to R	0.013	0.013	6.2
	T to GND	N/A	N/A	N/A
	R to GND	N/A	N/A	N/A
90	T to R	0.015	0.015	6.0
	T to GND	N/A	N/A	N/A
	R to GND	N/A	N/A	N/A
100	T to R	0.017	0.017	5.9
	T to GND	N/A	N/A	N/A
	R to GND	N/A	N/A	N/A
200	T to R	0.03	0.03	6.6
	T to GND	N/A	N/A	N/A
	R to GND	N/A	N/A	N/A

Notes: Unit meets requirement

4.7.2 DC Current and AC Impedance (Loop-Start) During Simulated Ringing

Test Equipment: 1093, 1094, 1098

Requirements: During the application of simulated ringing:
The total DC current shall not exceed 3.0 mA.
The AC Impedance shall be greater than or equal to the value specified in Table 4.12.
Shown below are the frequencies and AC voltages used which yield maximum and minimum ringer equivalence:

Ringer Type	Frequency, (Hz)	Uac (V)	DC Current (mA)	AC Current (mA)	AC Impedance (KΩ)
A	20±3	40 to 130	1.4	1.95	66.7
A	30±3	40 to 130	1.5	1.9	68.4
B	15.3 to 34	40 to 130	1.8	2.2	59.1
B	>34 to 49	62 to 130	1.5	1.9	68.4
B	>49 to 68	62 to 150	1.8	2.3	65.2

Notes:

4.7.3.2 (68.312(b)(2)) (68.312(c)) AC Impedance During Simulated Ringing Impedance to Ground During Ringing

Test Equipment: 1093, 1094, 1098

☐

The impedance to ground during ringing exceeded ☐ kΩ on each lead

Notes: No such unit

4.7.5 (68.312(d)) Maximum Ringer Equivalence

Loop Start

DC REN per 68.312(d)(1)(i) is	0.8	Unit meets requirement
DC REN per 68.312(d)(1)(ii) is	0.1	Unit meets requirement
DC REN per 68.312(d)(1)(iii) is	0.6	Unit meets requirement
The highest DC REN is	0.6	Unit meets requirement
The AC REN per 68.312(d)(1)(iv) is	0.1B	Unit meets requirement

Ground Start

DC REN per 68.312(d)(2)(i) is	NA	Not applicable to this unit – Not Ground Start unit
AC REN per 68.312(d)(2)(ii) is	NA	Not applicable to this unit – Not Ground Start unit
The ringer equivalence is	0.6	Unit meets requirement

Notes:

4.8 (68.314) Billing Protection

4.8.1 (68.314(a)) Call Duration Requirements

Test Equipment: 1116

2 seconds	Delay between line seizure and data transfer

P

Notes: _____

4.8.2 (68.314(b)) Voice and Data equipment On-Hook Signal requirements

Test Equipment: 1106, 1097

Registered terminal equipment shall assure that, when an incoming telephone call is answered, the answering terminal equipment prevents both transmission and reception for at least 2 seconds after the answering terminal equipment transfers to the off-hook condition. The power delivered info a 2-wire loop simulator circuit or into the transmit and receive pair of a 4-wire loop simulator or into a 600 Ohm termination in the on-hook state, by loop-start or ground-start equipment shall not exceed **–55dBm** for the frequency band from 200 to 3200 Hz.

Measurement state	**Measured level**
On-hook	-60.8dBm
Transmit:	
Receive:	

Notes: _____

4.8.3 (68.314(c)(1)) Voice and Data equipment loop current requirements for equipment connected to the Public Switched Network

Test Equipment: 1093, 1097

The line was seized with [ ] % overshoot

OR

[√] Passed 200Ω Test
Current drawn by EUT greater than that drawn by 200Ω

[P]

Notes: _____

4.8.4.1 (68.314(d)(1)) Signaling Interference requirements

Test Equipment: 1116, 1147, 1102

√

4.8.4.1 Energy in the 800 Hz to 2450 Hz band is greater or equal than the energy in the 2450 Hz to 2750 Hz band for all internally generated signals.

P

Comply to requirements

Test	Signal Level, dBm
800-2450 Hz band	-25.38
2450-2750 Hz band	-31.62

Appendix 1

Photos

Overall view





Internal battery



Line and power connection



Internal view of the unit

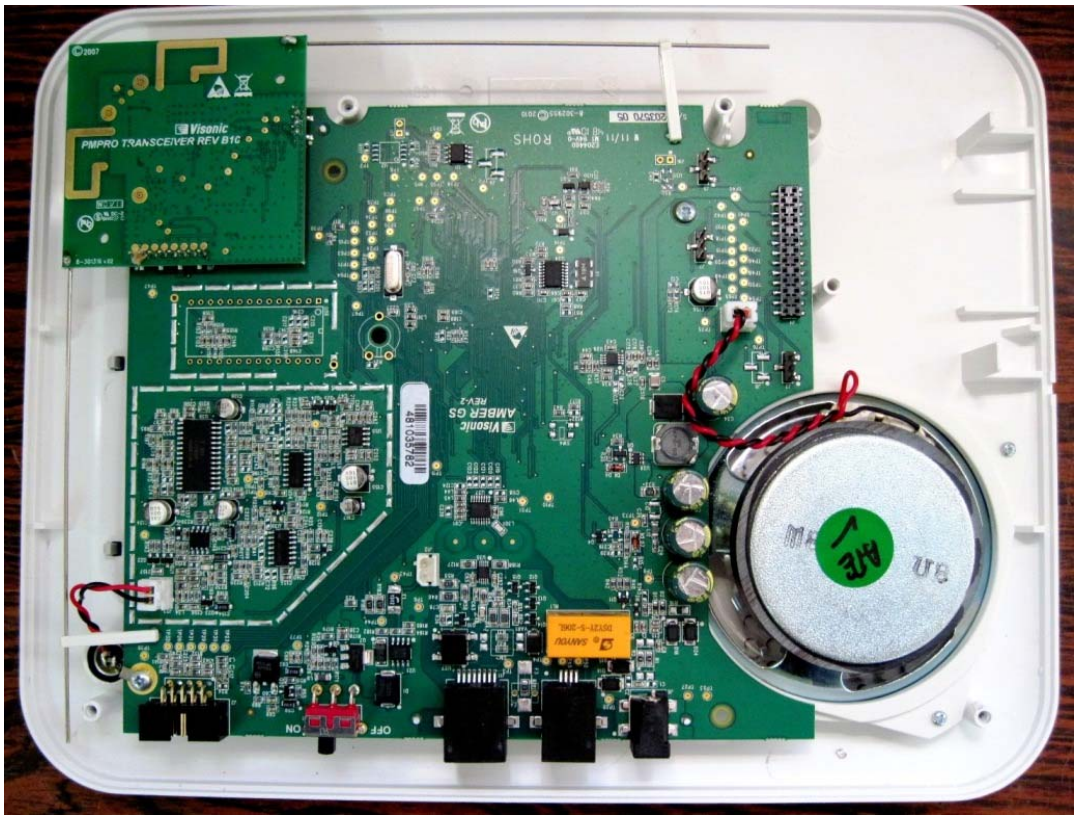



End of report

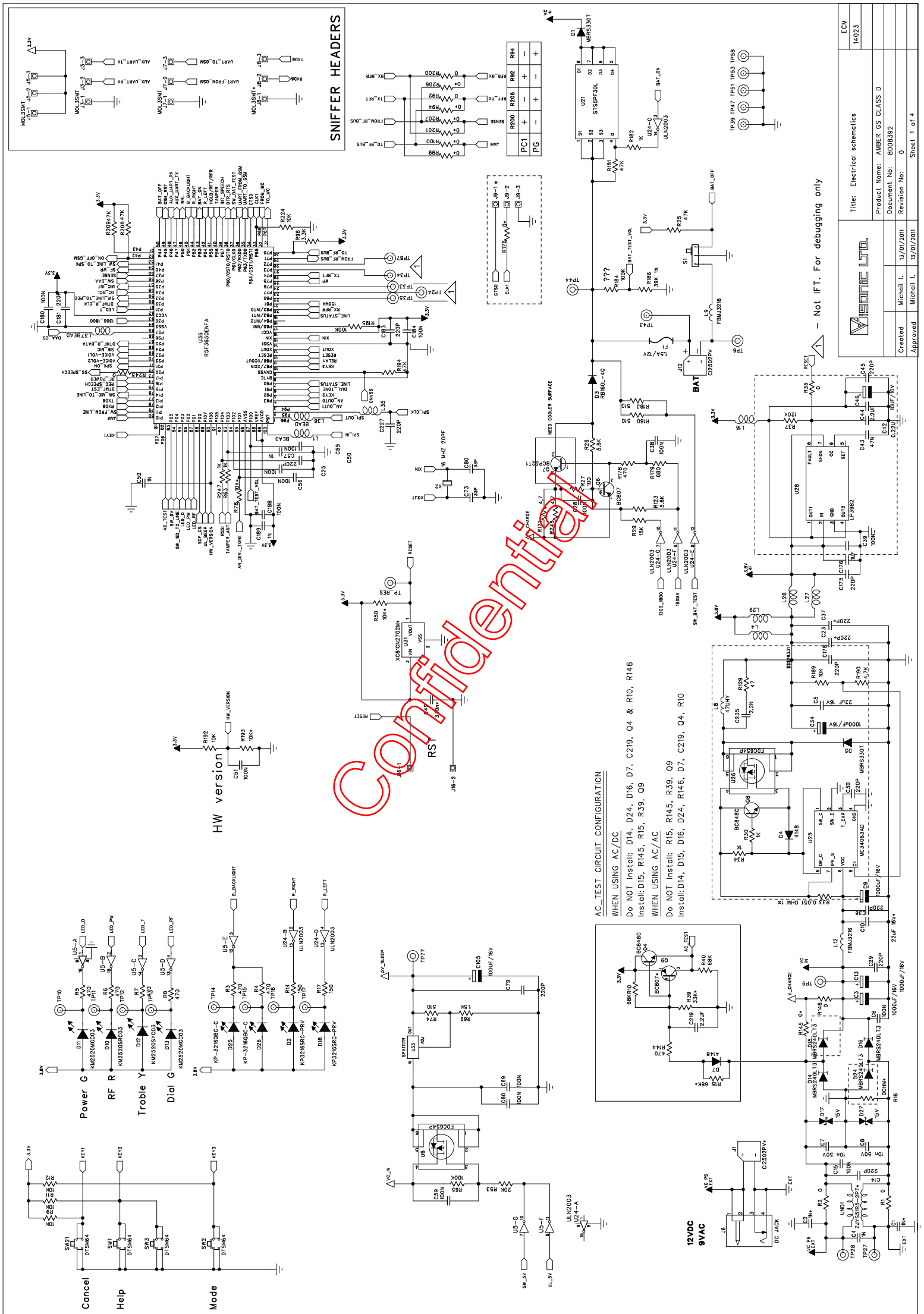
SNIFFER HEADERS
Confidential
HW version
RST
Power G
RF R
Troble Y
Dial G
Cancel
Help
Mode
12VDC
9VAC
BAT
AC_TEST CIRCUIT CONFIGURATION
WHEN USING AC/DC
Do NOT Install: D14, D24, D16, D7, C219, Q4 & R10, R146
Install:D15, R145, R39, Q9
WHEN USING AC/AC
Do NOT Install: R15, R145, R39, Q9
Install:D14, D15, D16, D24, R146, D7, C219, Q4, R10
- Not IFT. For debugging only
Title: Electrical schematics
Product Name: AMBER GS CLASS D
Document No: 8008392
Revision No: 0
Sheet 1 of 4
Created Michail I. 13/01/2011
Approved Michail I. 13/01/2011
ECM
14023

AMBER GS.sch-2 - Thu Jan 13 14:29:39 2011

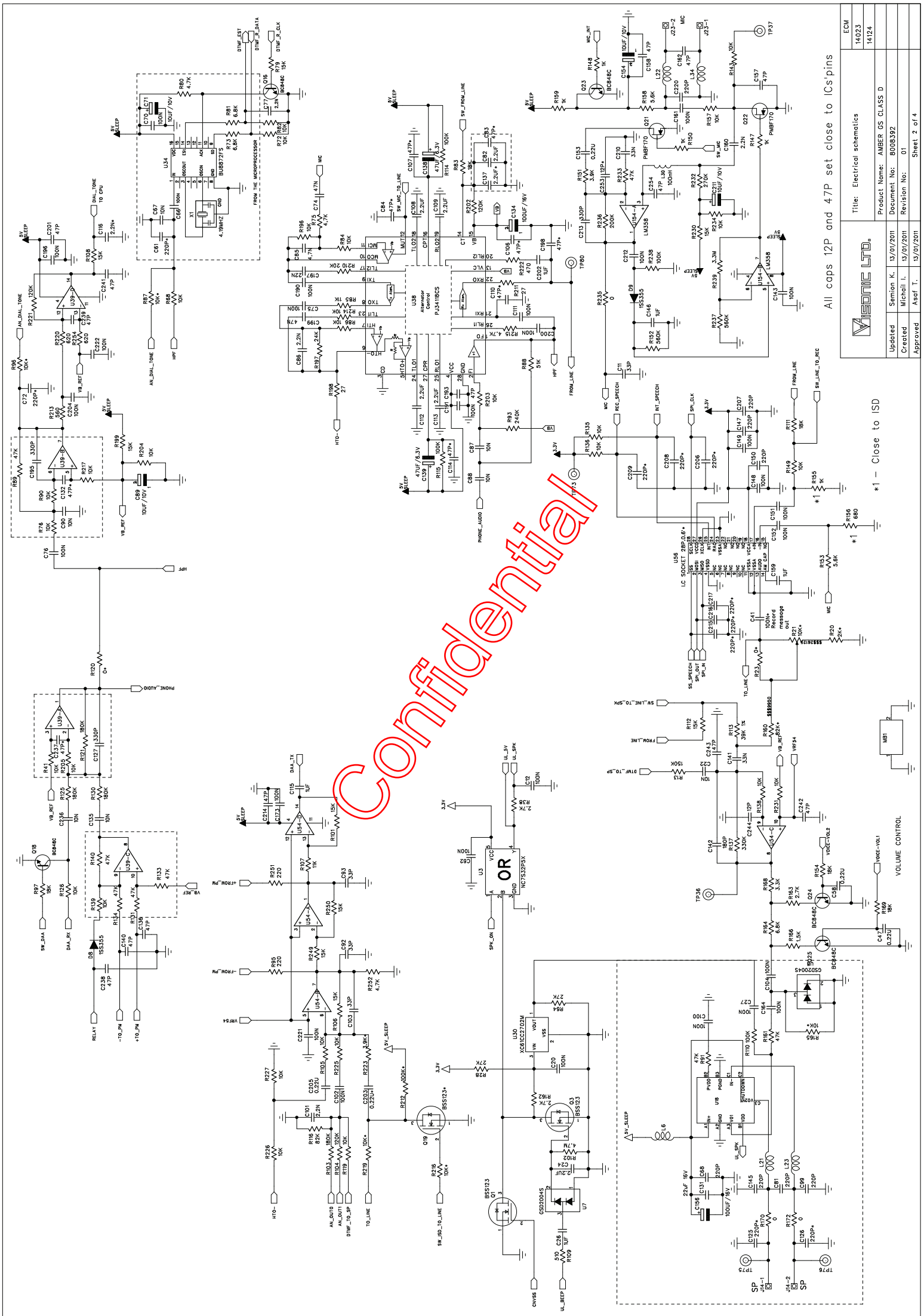

Confidential

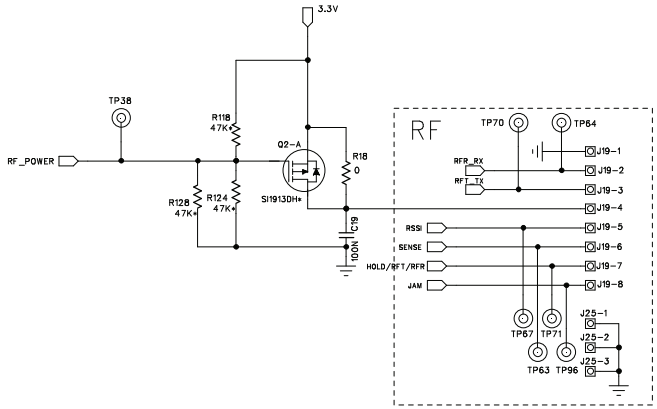

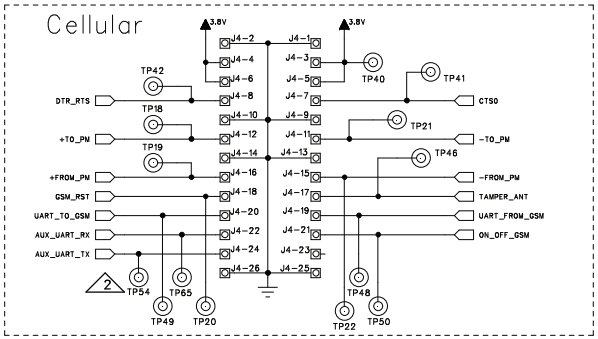

2 – 80 mil pad for integration tester

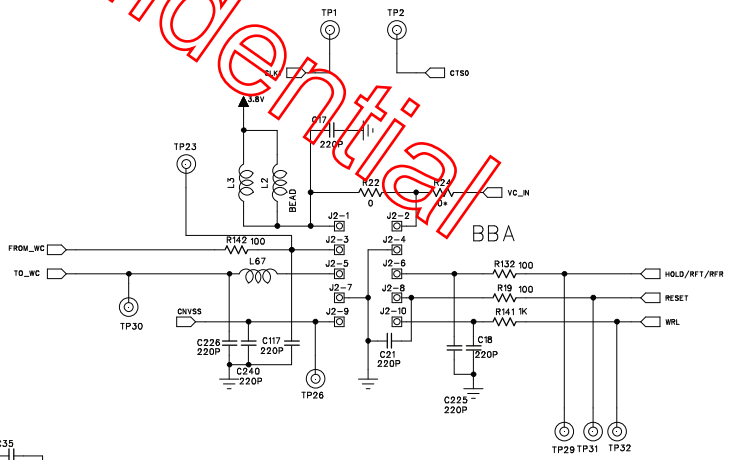

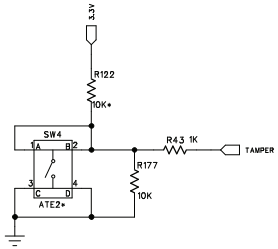

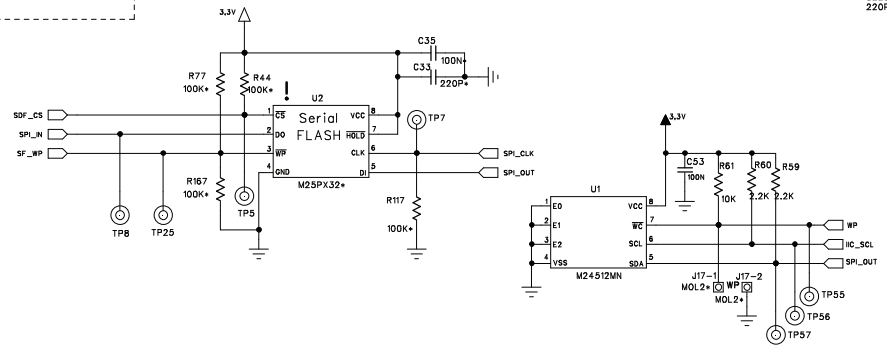

!Device without defined Visonic part number

Visonic LTD.			Title: Electrical schematics	ECM 14023 14124
			Product Name: AMBER GS CLASS D	
			Document No: 8008392	
Created	Michail I.	13/01/2011	Revision No: 01	
Approved	Michail I.	13/01/2011	Sheet 3 of 4	

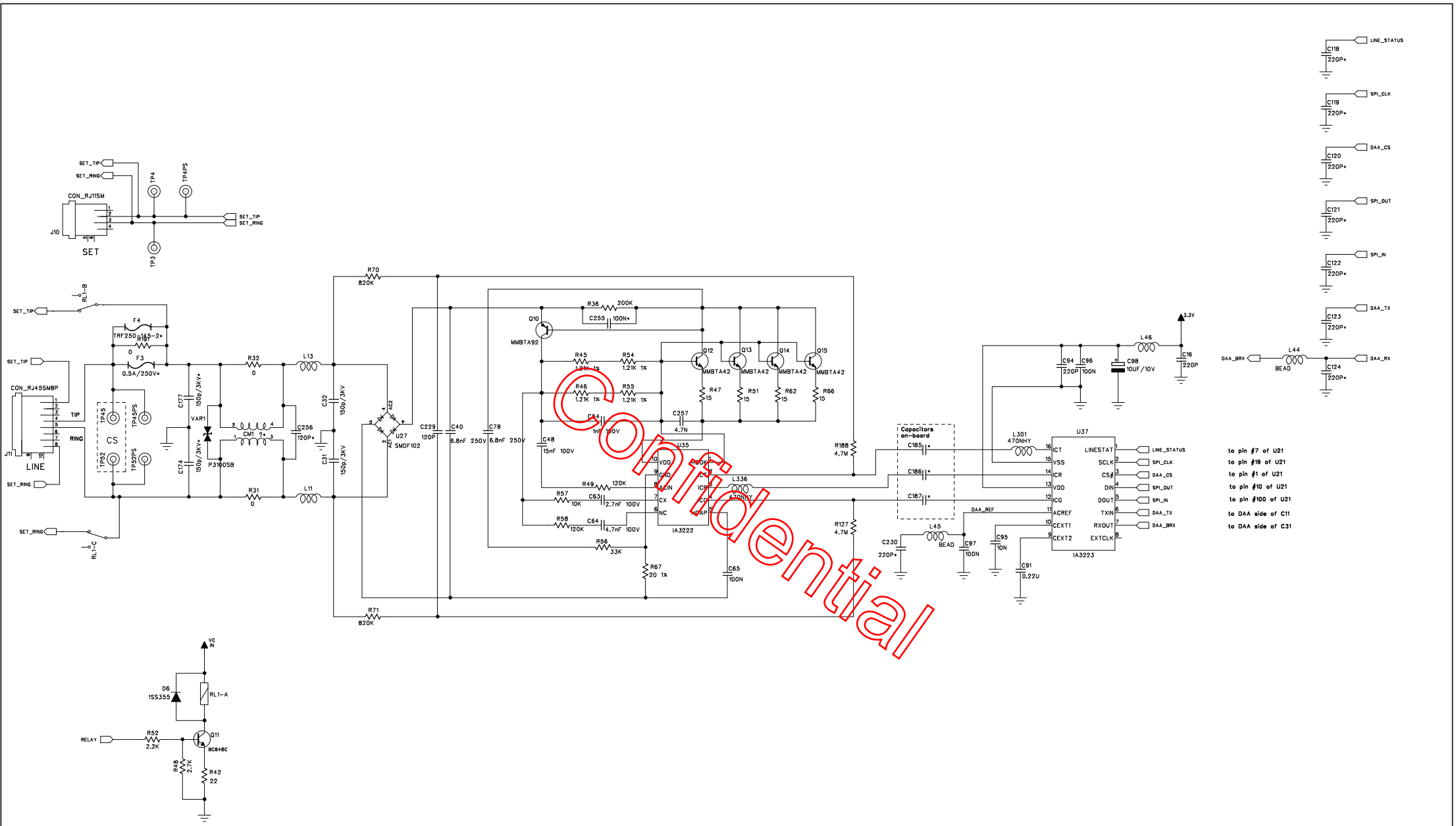

Confidential

VISONIC LTD.			Title: Electrical schematics	ECM 14023 14124
			Product Name: AMBER GS CLASS D	
			Document No: 8008392	
Created	Michail I.	13/01/2011	Revision No: 01	
Approved	Michail I.	13/01/2011	Sheet 4 of 4	

0-101709
1/1/2000
AMBER GS LA (315) KIT
1

Lev	Object ID	Object description	InstPoint	Quantity	BUn	
0	0-101709	AMBER GS LA (315) KIT		1		
0.1	90-203676	AMBER GS LA (315)		1	PC	
..2	E-203854	AMBER GS CLASS D E.MOD	M9	1	PC	
...3	22520090	RELAY 6V/1.25A .2C .	RL1	1	PC	
...3	23110026	TB Head 2P 2.5 Str TH with housi	J14;J23	2	PC	
...3	45900070	BTB Head 3P 2.54 Str SM	J3;J5;J7;J25	4	PC	PH
...3	45910010	Mod Jack RJ-11 6/4P SM	J10	1	PC	
...3	45910040	Mod Jack RJ-45 8/8P SM	J11	1	PC	
...3	45910050	DC JACK 3P SM	J6	1	PC	
...3	50000000	sistor TF 0805 0 R 1/8 W ± 5 % S	R2;R1;R191	3	PC	
...3	50001030	sistor TF 0805 10 K 1/8 W ± 5 % S	R57	1	PC	
...3	50001240	istor TF 0805 120 K 1/8 W ± 5 % S	R49;R58	2	PC	
...3	50003330	sistor TF 0805 33 K 1/8 W ± 5 % S	R56	1	PC	
...3	50004750	RES TF 4.7M 1/8W 5% SM 0805	R188;R127	2	PC	
...3	50105110	RES TF 510 1/4W 5% SM 1206	R180;R183	2	PC	
...3	50108240	RES TF 820K 1/4W 5%SM 1206	R70;R71	2	PC	
...3	50200005	RES TF 0.051 1/4W 5% SM 1206	R33	1	PC	
...3	50800000	sistor TF 0603 0 R 1/10 W ± 5 % S	15;R92;R35;R31;R235;R22;R18 R200;R146;R170;R172;	12	PC	
...3	50800470	RES TF 4.7 1/10W 5% SM 0603	R171;R246	2	PC	

...3	50801010	stor TF 0603 100 R 1/10 W ± 5 % ;	R19;R132;F	4	PC
...3	50801020	sistor TF 0603 1 K 1/10 W ± 5 % S	R159;R141; R30;R34;R155;R43 R182;R63;R247;R150	12	PC
...3	50801030	istor TF 0603 10 K 1/10 W ± 5 % S	R138;R149;I R82;R136;R72;R135 R157;R12;R11;R9 R192;R225;R226;R196; R224;R61;R204;R217 R143;R126;R105;R203; R177;R41;R205;R231 R139;R227;R68;R86	32	PC
...3	50801040	stor TF 0603 100 K 1/10 W ± 5 %	R110;R195;I	4	PC
...3	50801240	RES TF 120K 1/10W 5% SM 0603	4;R202;R221	4	PC
...3	50801500	RES TF 15 1/10W 5% SM 0603	2;R51;R47;F	4	PC
...3	50801520	stor TF 0603 1.5 K 1/10 W ± 5 %	R69;R166	2	PC
...3	50801530	RES TF 15K 1/10W 5% SM 0603	R249;R250;I R79;R199;R108;R106	8	PC
...3	50801830	RES TF 18K 1/10W 5% SM 0603	4;R97;R169; R111	5	PC
...3	50801840	stor TF 0603 180 K 1/10 W ± 5 %	21;R130;R1	3	PC
...3	50802030	RES TF 20K 1/10W 5% SM 0603	R53;R210	2	PC
...3	50802040	RES TF 200K 1/10W 5% SM 060	R36	1	PC
...3	50802200	ES TF 22 Ohm 1/10W 5% SM 06	R42	1	PC
...3	50802210	stor TF 0603 220 R 1/10 W ± 5 %	R251;R95	2	PC
...3	50802220	stor TF 0603 2.2 K 1/10 W ± 5 %	R59;R60;R5	3	PC
...3	50802430	RES TF 24K 1/10W 5% SM 0603	R197	1	PC
...3	50802440	RES TF 240K 1/10W 5% SM 060	R93	1	PC

...3	50802700	RES TF 27 1/10W 5% SM 0603	R198;R211	2	PC
...3	50802720	RES TF 2.7K 1/10W 5% SM 0603	;R38;R163;R	4	PC
...3	50802730	RES TF 27K 1/10W 5% SM 0603	R28;R64	2	PC
...3	50803320	stor TF 0603 3.3 K 1/10 W ± 5 %	R168;R98	2	PC
...3	50803350	RES TF 3.3M 1/10W 5% SM 0603	R239	1	PC
...3	50804700	RES TF 47 1/10W 5% SM 0603	R129	1	PC
...3	50804710	stor TF 0603 470 R 1/10 W ± 5 %	222;R8;R7;R R5;R4;R3;R144 R178	9	PC
...3	50804720	RES TF 4.7K 1/10W 5% SM 0603	R252;R80	2	PC
...3	50804730	istor TF 0603 47 K 1/10 W ± 5 %	9;R208;R131 R181;R140;R134;R133; R194	9	PC
...3	50804750	RES TF 4.7M 1/10W 5% SM 0603	R102	1	PC
...3	50805110	RES TF 510 1/10W 5% SM 0603	R74;R109	2	PC
...3	50805130	RES TF 51K 1/10W 5% SM 0603	R88	1	PC
...3	50805610	RES TF 560 1/10W 5% SM 0603	R213	1	PC
...3	50805620	RES TF 5.6K 1/10W 5% SM 0603	;R153;R123	4	PC
...3	50805640	RES TF 560K 1/10W 5% SM 0603	R237;R152	2	PC
...3	50806210	RES TF 620 1/10W 5% SM 0603	R254;R220	2	PC
...3	50806810	RES TF 680 1/10W 5% SM 0603	R156;R179	2	PC
...3	50806820	stor TF 0603 6.8 K 1/10 W ± 5 %	164;R73;R8	3	PC
...3	50806830	RES TF 68K 1/10W 5% SM 0603	R10;R40	2	PC

...3	50808230	RES TF 82K 1/10W 5% SM 0603	R116	1	PC
...3	50901030	RES TF 10K 1/10W 1% SM 06034;	R189;R90; R234	5	PC
...3	50901040	RES TF 100K 1/10W 1% SM 0603	84;R114;R1	3	PC
...3	50901130	RES TF 11K 1/10W 1% SM 0603	R85;R107	2	PC
...3	50901530	RES TF 15K 1/10W 1% SM 0603	R112;R230	2	PC
...3	50901540	RES TF 150K 1/10W 1% SM 0603	R13	1	PC
...3	50901840	RES TF 182K 1/10W 1% SM 0603	R103	1	PC
...3	50902040	RES TF 200K 1/10W 1% SM 0603	R236	1	PC
...3	50902740	RES TF 274K 1/10W 1%SM 0603	R232	1	PC
...3	50903340	RES TF 332K 1/10W 1% SM 0603	R137	1	PC
...3	50903920	stor TF 0603 3.92 K 1/10 W ± 1 %	R151	1	PC
...3	50903930	RES TF 39.2K 1/10W 1% SM 060	R113;R186	2	PC
...3	50904720	RES TF 4.75K 1/10W 1% SM 060	75;R215;R1	3	PC
...3	50904730	stor TF 0603 47.5 K 1/10 W ± 1 %	3;R89;R161;	4	PC
...3	53231210	ap Cer 120pF 250V 10% X7R 08	C229	1	PC
...3	53321030	Cap Cer 10nF 50V 5% X7R 0603	;C22;C135;C C87;C88;C90;C95	8	PC
...3	53321200	Cap Cer 12pF 50V 5% C0G 0603	C244	1	PC
...3	53321810	Cap Cer 180pF 50V 5% C0G 060	C142	1	PC
...3	53322210	Cap Cer 220pF 50V 5% C0G 060	8;C81;C94;C C50;C79;C45;C147 C29;C145;C36;C30 C117;C150;C14;C16 C17;C183;C181;C207 C18;C178;C220;C227 C226;C225;C21;C240 C175	29	PC
...3	53323300	Cap Cer 33pF 50V 5% C0G 06033	;C92;C80;C C103;C11	6	PC
...3	53323310	Cap Cer 330pF 50V 5% C0G 060	13;C195;C1	3	PC

...3	53324700	Cap Cer 47pF 50V 5% C0G 0603	C157;C158;C241;C214;C140;C136;C243;C254;C193;C242;C201;C238	14	PC
...3	53331030	citor X7R 0603 10 nF 50 V ± 10 %	C8;C7	2	PC
...3	53331040	p X7R 0603 100nF 50V ± 10 % S	2;C65;C69;C66;C6;C27;C25 C28;C20;C19;C15 C38;C39;C12;C51 C53;C55;C56;C59 C70;C111;C143;C148 C149;C151;C152;C161; C164;C173;C180;C184; C188;C190;C191;C196; C200;C204;C212;C221; C222;C75;C76;C96 C97;C100;C102;C104	48	PC
...3	53332220	Cap Cer 2.2N 50V 10% (X7R) 060	;C235;C160;C101	5	PC
...3	53332240	) X7R 0603 220 nF 16 V ± 10 % S	;C91;C153;C47;C42	6	PC
...3	53334720	p X7R 0603 4.7 nF 50 V ± 10 % S	C85;C257	2	PC
...3	53334730	citor X7R 0603 47 nF 50 V ± 10 %	74;C199;C4	3	PC
...3	53342230	citor X7R 0603 22 nF 50 V ± 10 %	C197	1	PC
...3	53343330	Cap.Cer. 33nF 25V 10% X7R 060	C210;C141	2	PC
...3	53351020	acitor X7R 0603 1 nF 50 V ± 10 %	;C189;C57;C	4	PC
...3	53351050	).Cer.1UF 16V -20% +80% Y5V 0	;C115;C159;	4	PC
...3	53372250	CAP..2.2UF.6.3V.10%.0603	;C112;C24;C219;C113;C109;C44	8	PC
...3	53441511	P CE 150pF X7R 3KV 20% SM 1	C31;C32	2	PC
...3	56500141	CRSTL'SMD 16MHZ 20PF	X2	1	PC

...3	56501100	CERAM.RES.SMD 4.19 MHz	X1	1	PC
...3	60703240	I.C SO-14 LM324DT	U54;U39	2	PC
...3	60703584	I.C SO-8 T/R LM358D(SGS)	U154	1	PC
...3	60720030	I.C. SO-16 ULN2003D T/R	U24;U5	2	PC
...3	61200040	C VOICE SWITCHED SP SM SO-2	U38	1	PC
...3	61588720	DTMF RECEIVER BU8872	U34	1	PC
...3	62600010	O SW GSD2004S DUAL SM SOT	U7;U8	2	PC
...3	62641480	4148 SMD DIODE MINIMELF	D4;D7	2	PC
...3	62653550	DIODE CASE USM TE-17	D6;D8;D9	3	PC
...3	63000010	SMD DIP BRIDGE	U27	1	PC
...3	63816040	SCHOTTKY DIODE 40V 1A SMD	D3	1	PC
...3	63824040	DIO SH MBRS240 40V/2A SM SM	4;D15;D16;D	4	PC
...3	63833000	Schottky Diode 30V/3A SMC	D1;D5	2	PC
...3	63900010	SIDACTOR P3100SB SM	VAR1	1	PC
...3	64100010	NPN MMBTA42 .3W/.5A S M SO	2;Q13;Q14;Q	4	PC
...3	64100020	PNP MMBTA92 .3W/.5A S M SO	Q10	1	PC
...3	64108070	PNP TRANSISTOR SOT-23	Q6	1	PC
...3	64108480	NPN TRANSISTOR SOT-23	6;Q18;Q23;Q Q25;Q11;Q8;Q4	8	PC
...3	64205200	PNP TRANSISTOR SOT-223	Q7	1	PC
...3	64400010	MOSFET P-Channel 30V/8A SO-8	U21	1	PC
...3	64400040	TRANSISTOR SMD FET	Q21;Q22	2	PC
...3	64400090	R FET P-ch -30V/-3.6A SM SSOT	U26;U6	2	PC
...3	64403010	TRANS.SMD FET BSS123	Q3;Q1	2	PC
...3	65301330	LOW DROP CMOS LIN REG3.3	U28	1	PC
...3	65303270	Voltage Detector 2.7V SOT-23	U30	1	PC

...3	65816080	e Bead MLL 600 ohm ± 25% 0603	5;L45;L44;L L36;L34;L67;L1 L11;L13;L22	11	PC	
...3	66000003	r Inductor 47uH 20% SMT 10x10	L8	1	PC	
...3	66001160	SMD COIL 470NHY 5% 0805	L301;L336	2	PC	
...3	67010010	LED Mega-Green SMD	D11;D13	2	PC	
...3	67022000	RED LED SMD 1206	D18;D2	2	PC	
...3	67062100	WATER CLEAR LED SMD RED	D10	1	PC	
...3	68231010	Cap Tant 10uF 10V 10% Size A	4;C211;C98; C71;C46	6	PC	
...3	69261050	AP CE 1UF 10V 10% X5R SM 06	C202;C26	2	PC	C
...3	69310060	AP EL 100UF 16V 20% SM 6.3X5	56;C134;C1	3	PC	E
...3	69347630	CAP EL 47UF 6.3V 20% SM 5X5.4	C139;C138	2	PC	
						NA
...3	155-302014	AP EL L.ESR 1000uF/16V 10x16	9;C13;C3;C3	4	PC	
...3	231-300766	TB Head 5P 2R 2.54 RA TH Shrd	J2	1	PC	
...3	254-302844	SLIDE SWITCH 6A 28VDC RA TH	S1	1	PC	
...3	454-300894	TCT SPST 1P 12V/0.05 SM 6X6	1;SW3;SW2;	4	PC	
...3	459-302842	Socket 26P 2R 2.54 Str SM Bottor	J4	1	PC	H
...3	460-300880	BTB Head 8P 2.54 Str SM	J19	1	PC	
...3	500-300725	RES TF 1.21K 1/4W 1% SM 1206	5;R46;R54;R	4	PC	
...3	500-300726	RES TF 20 Ohm 1/4W 1% SM 120	R67	1	PC	
...3	530-300729	AP CER 6.8nF 250V 10% X7R 08	C78;C40	2	PC	
...3	530-300731	CAP CER 1nF 100V 10% X7R 060	C54	1	PC	C
...3	530-300732	AP CER 15nF 100V 10% X7R 08	C48	1	PC	
...3	530-300733	AP CER 4.7nF 100V 10% X7R 06	C64	1	PC	

...3	530-300734	AP CER 2.7nF 100V 10% X7R 06	C63	1	PC
...3	530-301707	AP.CER.22uF 16V +/-20% X5R 12	C5;C131	2	PC
...3	600-300696	PTC FUSE 1.5A/12V SMD 1812	F1	1	PC
...3	605-300509	EEPROM 2.5-5.5V 512K SO8 15(	U1	1	PC
...3	605-300721	UP/DOWN SWITCH REG 1.5A S	U25	1	PC
...3	605-300728	/ DROP VOLTAGE REG ADJ SM	U33	1	PC
...3	605-300804	DAA LINE SIDE IA3222 SM MSOF	U35	1	PC
...3	605-300805	A SYSTEM SIDE IA3223 SM QS(	U37	1	PC
...3	605-302030	U 16b w/Flash 256K PQFP-100 R	U36	1	PC
...3	605-302743	SINGLE OR GATE "32" SM SC7(	U3	1	PC
...3	620-300692	INDUCT 100nH 5% SM 0805	L30	1	PC
...3	658-300643	e Bead MLL 600 ohm ± 25% 060	23;L21;L16;L L4;L3;L2;L46 L29;L28	10	PC
...3	658-302869	IIP FERRITE BEAD 1206 4A 80 o	L12;L9	2	PC
...3	670-300141	LED BLUE SMT 3.2x1.6mm	D25;D26	2	PC
...3	670-300753	ED WATER CLEAR SMD YELLO'	D12	1	PC
...3	675-301710	ARISTOR 15V FOR ESD SMD 06	D17;D27	2	PC
...3	8-302992	PCB AMBER GS CLASS D REV-0		1	PC
...3	605-303065	IC Audio Power Ampl D BGA-9	U18	1	PC
...3	50801510	RES TF 150 1/10W 5% SM 0603	R14;R17	2	PC
..2	E-203917	AMBER GS TRANSCEIVER LC (315)		1	PC
...3	50800000	sistor TF 0603 0 R 1/10 W ± 5 % S	R19	1	PC
...3	51400000	sistor TF 0402 0 R 1/16 W ± 5 % S	5;R24;R23;F	4	PC
...3	51401030	istor TF 0402 10 K 1/16 W ± 5 % S	6;R35;R34;F R27;R15;R18;R26 R9	9	PC
...3	51401040	stor TF 0402 100 K 1/16 W ± 5 %	R17;R6;R7;R R11;R12	6	PC
...3	51401840	stor TF 0402 180 K 1/16 W ± 5 %	R1	1	PC
...3	51402210	stor TF 0402 220 R 1/16 W ± 5 %	R3	1	PC

...3	51403310	stor TF 0402 330 R 1/16 W ± 5 % 7;	R40;R51;R R21	5	PC
...3	51403900	RES TF 39 1/16W 5% SM 0402	R2	1	PC
...3	51405630	istor TF 0402 56 K 1/16 W ± 5 %	R13	1	PC
...3	53500120	Cap Cer 1.2pF 50 V 5% C0G 040	C1	1	PC
...3	53500680	Cap Cer 6.8pF 50 V 2% C0G 040	C4;C6;C9	3	PC
...3	53501030	citor X7R 0402 10 nF 50 V ± 10 %0;	C33;C32;C	4	PC
...3	53501040	X7R 0402 100 nF 16 V ± 10 %	C27	1	PC
...3	53501200	citor NPO 0402 12 pF 50 V ± 5 %	C8	1	PC
...3	53502200	Cap Cer 22pF 50V 5% C0G 0402	C11	1	PC
...3	53502210	citor NPO 0402 220 pF 50 V ± 5 %	C29;C34;C5	3	PC
...3	53502700	Cap Cer 27pF 50V 5% C0G 0402	C21;C2	2	PC
...3	53503310	citor NP0 0402 330 pF 50 V ± 5 %3;	C7;C12;C4	4	PC
...3	53504700	Cap Cer 47pF 50V 5% C0G 0402	C14;C13	2	PC
...3	53504730	Cap Cer 47nF 16V 10% X7R 0402	C19;C25;C3	3	PC
...3	63800010	ODE SCHOTTKY 30V/0.5A SOD-	D1	1	PC
...3	64108481	NPN (GAIN 420-800) 30V SOT-	Q5;Q4;Q3	3	PC
...3	65400020	C SPDT SWITCH RF SM SOT 36	U4;U3;U12	3	PC
...3	65800601	e Bead MLL 600 ohm ± 25% 080	2;L13;L15;L L17;L18	6	PC
...3	66010100	NDUCT Chip 18nH +/-5% SM 040	L11	1	PC
...3	66010120	NDUCT Chip 33nH +/-5% SM 040	L4;L1;L7	3	PC
...3	66010160	IDUCT Chip 100nH +/-5% SM 04	L9	1	PC
...3	66010190	DUCT Chip 4.7nH +/-0.3 nH SM 0	L10;L21	2	PC
...3	530-300253	P CE 1uF/6.3V +/-10% X5R SM 0	C50	1	PC
...3	530-300419	Cer 3.9pF 50V +/-0.1pF C0G SM	C46	1	PC
...3	530-300943	acitor X7R 0402 1nF 50V ± 10%	7;C36;C35;C	15	PC

			C23;C22;C20;C39 C41;C42;C44;C16 C15;C18;C17		
...3	565-300334	6.000M 10/30ppm 16pF SM HC4	Y2	1	PC
					ADXF
...3	567-300297	FILTER EMI LC 10MHz SM 0805	U7	1	PC
...3	567-301376	FILTER SAW LC 315MHz SM 3X3	FL1	1	PC
...3	605-300063	C1100 RF TRANSCEIVER SM QI	U1	1	PC
...3	605-300987	IC16F690 MICROCONT SM SSC	U2	1	PC
...3	620-300491	UCT AIR CORE 43nH 2% SM SIZ	L6	1	PC
...3	620-300763	NDUCT Chip 22nH +/-5% SM 040	L19	1	PC
...3	620-300782	NDUCT Chip 68nH +/-5% SM 040	L5;L8	2	PC
...3	620-301494	CT AIR CORE 56nH 2% SM SIZE	L2	1	PC
...3	641-303066	NPN RF LNA BFU725F SM SOT-	Q2	1	PC
...3	H-301207	MECH TRANSCEIVER SHIELD FI	SHLD1	1	PC
...3	H-300538	MECH TRANSCEIVER SHIELD C(	COVER	1	PC
...3	H-300837	BMECH PMPRO TRANS ANT 123	ANT1;ANT2	2	PC
...3	8-301316	B PMPRO TRANSCEIVER REV I	PCB	1	PC
..2	P-203611	LPAST AMBER GS LIGHTPIPE I	M15	1	PC
...3	P-0006-2	.YCARBONATE CARBOTEX K-30FR		1.77	KG
...3	P-300534	W PC DIFFUSER MILKY MASTERBATCH		0.07	KG
..2	P-203612	.PAST AMBER GS LIGHTPIPE R	M8	1	PC
...3	P-0006-2	.YCARBONATE CARBOTEX K-30FR		1.77	KG
...3	P-300534	W PC DIFFUSER MILKY MASTERBATCH		0.07	KG
..2	P-203613	' AMBER GS PROGRAMING BA(	M6	1	PC
...3	P-302863	ABS 5VA DARK GREY		0.02	KG
..2	P-203614	AST AMBER GS ON/OFF BACK	M7	1	PC
...3	P-302863	ABS 5VA DARK GREY		0.02	KG
..2	P-203688	ABLPAST AMBER GS (+ NA) BA	M12	1	PC
...3	P-302863	ABS 5VA DARK GREY		274	KG
..2	P-200425	BLPAST AMBER NA SPEAKER R	M4	1	PC
...3	P-0000-1	ABS PA-757 A93548-B5 POLYLAC		15	KG
..2	P-7425-5	HOM.HEALTH CARE BAT.DOOR	M14	1	PC
...3	P-302863	ABS 5VA DARK GREY		26.22	KG
..2	P-200429	PAST AMBER NA ANTENA SUP	M20	2	PC
...3	P-0000-1	ABS PA-757 A93548-B5 POLYLAC		1.56	KG
..2	P-203695	AST AMBER GS L.A COVER ASS	M1	1	PC
...3	P-203708	T AMBER GS UPPER FRAME+BUTT ASS		1	PC
....4	P-203707	ST AMBER UPPER FRAME ASSEMBLY		1	PC
.....5	P-203616	ST AMBER GS UPPER TRAMSI	M4	1	PC
......6	P-0006-2	.YCARBONATE CARBOTEX K-30FR		28.55	KG
......6	S-300784	BEL PROTECT AMBER 126.05*67.92		1	PC
.....5	P-200415	BLPAST AMBER NA UPPER FRA	M2	1	PC
......6	P-0000-3	NATURAL ABS PA-757 POLYLAC		37.6	KG
......6	P-0006-P	ENHDW color masterbatch grey ABS		1.57	KG

.....5	S-302855	LABEL AMBER GS LEDS PVC	M3	1	PC	
....4	P-203620	FABLPAST AMBER GS COVER	M1	1	PC	
.....5	P-302088	ABS FR-5VA white RAL 9016		219	KG	
....4	P-200418	.PAST AMBER NA BUTTON BIG	M5	1	PC	
.....5	P-0000-3	NATURAL ABS PA-757 POLYLAC		4.34	KG	
.....5	P-0006-P	ENHDW color masterbatch grey ABS		0.28	KG	
....4	P-200419	AST AMBER NA BUTTON BIG C	M6	1	PC	
.....5	P-0000-3	NATURAL ABS PA-757 POLYLAC		10.84	KG	
.....5	P-0006-P	ENHDW color masterbatch grey ABS		0.28	KG	
....4	P-200420	PAST AMBER NA BUTTON BIG F	M7	1	PC	
.....5	P-0000-3	NATURAL ABS PA-757 POLYLAC		5.29	KG	
.....5	P-0006-P	ENHDW color masterbatch grey ABS		0.69	KG	
....4	H-300615	FABMECH SPRING 7.1mm	M9	4	PC	
...3	S-701736	P Amber GS CANCEL(Left)button tampon		1	PC	
...3	S-701737	AMP Amber GS HELP (middle) button		1	PC	
..2	255-302867	AMBER GS SWITCH ACTUATOI	M11	4	PC	
..2	PG-302870	W PORON SPON +ADHES 54x33	M2	1	PC	
..2	27050033	VG HHC 85MM SPEAKER .CABL	M3	1	PC	
..2	PA004060	ENHDW FEET ADHES 7.9x2. 2 m	M18	2	PC	
..2	PA007098	cr EJOT K 30 10 WN1412 A ST Z	M17	6	PC	
..2	PA007092	Scr EJOT K 22 10 WN1412 B ST	M16	4	PC	
..2	JS-701740	SW OB AMBER GS RELEASE		1	PC	
..2	J-701739	W OB AMBER GS (315) DEFAULT		1	PC	
..2	269-302884	MIC WIERED MEA AMBER GS	M10	1	PC	
..2	P-7425-G	PLST HOME H.CARE MIC RING	M19	1	PC	
...3	P-0001-1	YELLOW 221-55		1.98	KG	
...3	P-0006-0	BLACK COL. FOR PIRO PROT		0.15	KG	
..2	103-301179	Ni-Mh 7.2V 1.3Ah (6 x 1.2V AA) C	M13	1	PC	
..2	S-203715	LABEL AMBER GS PANEL		1	PC	
...3	S-0002-4	.E WHITE POLYESTER 69.85*25.4mm		1	PC	
0.1	PG002041	Y BAG 25*27cm+16cm-50 mic CLOSE		1	PC	
0.1	P-200424	FABLPAST AMBER NA LEG		1	PC	
..2	P-0000-3	NATURAL ABS PA-757 POLYLAC		22.22	KG	
..2	P-300614	GRAY COL. MASTERBATCH MB11925 ABS		0.93	KG	
0.1	K-201048	AMBER NA STRAIN RELIEF KIT		1	PC	
..2	P-200905	BLPAST AMBER NA STRAIN RELIEF		1	PC	
..2	PG002000	POLYTHL. 6X4cm+CLOSE		1	PC	
..2	PA007098	cr EJOT K 30 10 WN1412 A ST ZN		1	PC	
..2	S-0000-S	31X14mm WH. PAPER STK.A4		1	PC	
0.1	0-9943-5	CABLE OVL 26AWG 4 GRAY		1	PC	

0.1	0-101702	MCT-212 GS LA (315)		1	PC
..2	90-203672	MCT-212 GS LA (315)		1	PC
...3	0-9913-5	Li-Metal 3V 220mAh Button CR2032		1	PC
...3	E-203660	MCT-212 GS (315) MOD.		1	PC
....4	45402090	TCT 260g 16V/50mA SM 4.2x3.2	S1	1	PC
....4	45900150	BAT HOLDER CR2032 POS SM	BAT+	1	PC
....4	45900160	ATTERY CONTACT NEGATIVE S	BAT-	1	PC
....4	51400470	RES TF 4.7 1/16W 5% SM 0402	R9	1	PC
....4	51401030	istor TF 0402 10 K 1/16 W ± 5 % S	R3	1	PC
....4	51401040	stor TF 0402 100 K 1/16 W ± 5 %	R4;R2	2	PC
....4	51401050	istor TF 0402 1 M 1/16 W ± 5 % S	R8;R6	2	PC
....4	51401830	RES TF 18K 1/16W 5% SM 0402	R10	1	PC
....4	51402050	istor TF 0402 2 M 1/16 W ± 5 % S	R5	1	PC
....4	51403920	RES TF 3.9K 1/16W 5% SM 0402	R13	1	PC
....4	51403930	istor TF 0402 39 K 1/16 W ± 5 % S	R12	1	PC
....4	51406800	istor TF 0402 68 R 1/16 W ± 5 % S	R7	1	PC
....4	51406810	stor TF 0402 680 R 1/16 W ± 5 %	R1	1	PC
....4	51406820	stor TF 0402 6.8 K 1/16 W ± 5 %	R15	1	PC
....4	53234750	Cap Cer 4.7uF 6.3V 10% X5R 080	C16	1	PC
....4	53500120	Cap Cer 1.2pF 50 V 5% C0G 0402	C13	1	PC
....4	53500330	NPO 0402 3.3 pF 50 V ± 0.1 pF S	C1	1	PC
....4	53501000	Cap Cer 10pF 50V 5% C0G 0402	C9;C10	2	PC
....4	53501010	citor NPO 0402 100 pF 50 V ± 5 %	C8;C7;C3	3	PC
....4	53501030	citor X7R 0402 10 nF 50 V ± 10 %	29;C19;C6;C C17	5	PC
....4	53501500	Cap Cer 15pF 50V 5% C0G 0402	C21	1	PC
....4	53502200	Cap Cer 22pF 50V 5% C0G 0402	1;C12;C22;C	4	PC
....4	62653550	DIODE CASE USM TE-17	D3	1	PC
....4	63800050	SH MBR0520L 20V/0.5A SM SOD	D4	1	PC
....4	64100080	R MOSFET P-Chan 20V SM SC-7	Q6	1	PC

....4	64108481	: NPN (GAIN 420-800) 30V SOT-3	Q5	1	PC
....4	64385619	NPN RF HIGH FREQ. NE85619	Q2;Q1	2	PC
....4	620-302993	UCT Wire Wound 100nH +/- 5% 0	L8	1	PC
....4	66010080	NDUCT Chip 12nH +/-5% S M 040	L2	1	PC
....4	66010100	NDUCT Chip 18nH +/-5% SM 040	L1;L7	2	PC
....4	66010130	NDUCT Chip 47nH +/-5% SM 040	L3	1	PC
....4	66010160	IDUCT Chip 100nH +/-5% SM 04(	L4	1	PC
....4	67022000	RED LED SMD 1206	D1	1	PC
....4	68231010	Cap Tant 10uF 10V 10% Size A	C30	1	PC
....4	68232264	AP TN 22UF 6.3V 10% SM CASE	C25	1	PC
....4	530-300419	Cer 3.9pF 50V +/-0.1pF C0G SM	C4	1	PC
....4	530-300420	Cer 5.6pF 50V +/-0.1pF C0G SM	C5	1	PC
....4	566-301518	SN SAW 315MHz +/-50kHz SM 3)	Q4	1	PC
....4	605-300261	CP1402 STEPUP TO 2.7V SM SO	U6	1	PC
....4	605-301066	ow Volt. Detec. 1.8V+/-2% SM SO	Q3	1	PC
....4	605-301955	C16F506 MICROCONT SM TSSC	U1	1	PC
....4	620-300903	T POWER 47uH 10% SM 4.5X4X	L6	1	PC
....4	8-302938	CB MCT-212 315 GS REV A3 (RI	PCB	1	PC
....4	S-2457-2	LABEL MCT-212 RL PCB	Sticker	1	PC
.....5	S-0001-D	KAPTON WH LBL16.5*5.08mm		1	PC
...3	H-2457-1	BMECH MCT-212 WRIST PIN 24mm		2	PC
...3	P-202381	PAST MCT-212 BASE WITH STICKER		1	PC
....4	P-200070	ABPLAST MCT-212 BASE GR RL		1	PC
.....5	P-0000-1	ABS PA-757 A93548-B5 POLYLAC		4.07	KG
....4	PA002050	BUZZER STK.DL-1204101		1	PC
...3	P-200074	LAST MCT-212 COVER RING&LED RL		1	PC
....4	P-200071	ABPLAST MCT-212COVER GR RL		1	PC
.....5	P-0000-1	ABS PA-757 A93548-B5 POLYLAC		2.81	KG
....4	P-200072	BPLAST MCT-212 RED BUTTON RL		1	PC
.....5	P-300155	HDW Red color Masterbatch ME43855		0.02	KG
.....5	P-0001-1	YELLOW 221-55		0.63	KG
....4	P-200073	ABPLAST MCT-212 LED COVER RL		1	PC
.....5	P-0004-3	S TRASPARENT PA-758 POLYLAC		0.293	KG
....4	P-200075	MCT-212 RL BUTTON LOCK RING		1	PC
.....5	P-0000-1	ABS PA-757 A93548-B5 POLYLAC		1.13	KG
...3	S-2457-1	LABEL MCT-212 RL.PRODUCT	S1	1	PC
....4	S-301215	ABLE 23*22 POLYESTER TENABLE		1	PC
...3	K-300637	MCT-212 NECK PENDANT SET		1	PC

....4	P-300634	MCT-212 CLIPS		1	PC
.....5	P-301223	ADDITIVE IR TRANS RED		0.06	KG
.....5	P-303028	Linear LD polyethilene		1.18	KG
....4	P-300635	MCT-212 PLUG		1	PC
.....5	P-301223	ADDITIVE IR TRANS RED		0.02	KG
.....5	P-303028	Linear LD polyethilene		0.44	KG
....4	PA004040	MCT-241 CORD PKD.		1	PC
....4	PG002035	POLYTHL'BAG 10X7CM+CLOSE		1	PC
..2	N-1777-0	SRS-202 WHITE BOX		1	PC
..2	PA004601	FABPLST MCT-211 WRIST RL		1	PC
..2	S-2457-1	LABEL MCT-212 RL.PRODUCT	S2	1	PC
...3	S-301215	ABLE 23*22 POLYESTER TENABLE		1	PC
0.1	S-203716	LABEL AMBER GS PACKAGE		1	PC
..2	S-0000-5	BAR-CODE STICKER 110X70		1	PC
0.1	260-302913	AFO WM 120/9VAC/1A USA +TAB		1	PC
0.1	N-301380	G AMBER SELECT KIT BROWN (US)		1	PC
..2	N-301381	KG AMBER SELECT BOX BROWN		1	PC
..2	N-301382	AMBER SELECT STAGE BROWN (US)		1	PC
..2	N-301383	G AMBER SELECT DIVIDER BROWN		1	PC
..2	N-301384	AMBER SELECT COVER UNIT BROWN		1	PC

MPN	Name 1
	POLYTECH
9-1393792-5	TYCO
DSY2Y-S-206L	SANYOU
B2B-XH-A(LF)(SN)	JST
CI2202P1VK0	CVILUX
CI2502P1V00	CVILUX
353-14-22-03-10-1-2-00	ITRONIC ENTERPRISE CO
1M25-103GBCRA6.0-S0	AMTEK
N3312-008-02	CTK
N3313-009-01	CTK
3004CM6709 T/R	KINSUN
3004NP-882SMT T/R	KINSUN
KLDX-SMT2-0202-A-TR	KYCON
RTT05000JTP	RALEC
RC0805JR-070RL	YAGEO
RC2012J000CS	SAMSUNG
RTT05103JTP	RALEC
RC0805JR-0710KL	YAGEO
RC2012J103CS	SAMSUNG
RTT05124JTP	RALEC
RC0805JR-07120KL	YAGEO
RTT05333JTP	RALEC
RC0805JR-0733KL	YAGEO
RC2012J333CS	SAMSUNG
RTT05475JTP	RALEC
RC0805JR-074M7L	YAGEO
RC2012J475CS	SAMSUNG
RC3216J511CS	SAMSUNG
RTT06511JTP	RALEC
RC1206JR-07510RL	YAGEO
CR1206-JW-824-ELF	BOURNS
RK73B2BTTD824J	KOA
CRCW1206824JNEA	VISHAY
RTT06824JTP	RALEC
RC1206JR-07820KL	YAGEO
RTT06R051JTP	RALEC
RL1206JR-070R051L	YAGEO
RTT03000JTP	RALEC
RC0603JR-070RL	YAGEO
RC1608J000CS	SAMSUNG
RTT034R7JTP	RALEC
RC0603JR-074R7L	YAGEO

RC1608J4R7CS	SAMSUNG
RTT03101JTP	RALEC
RC0603JR-07100RL	YAGEO
RC1608J101CS	SAMSUNG
RC1608J102CS	SAMSUNG
RTT03102JTP	RALEC
RC0603JR-071KL	YAGEO
RTT03103JTP	RALEC
RC0603JR-0710KL	YAGEO
RC1608J103CS	SAMSUNG
RTT03104JTP	RALEC
RC0603JR-07100KL	YAGEO
RC1608J104CS	SAMSUNG
RTT03124JTP	RALEC
RC0603JR-07120KL	YAGEO
RC1608J124CS	SAMSUNG
RTT03150JTP	RALEC
RC0603JR-0715RL	YAGEO
RC1608J152CS	SAMSUNG
RTT03152JTP	RALEC
RC0603JR-071K5L	YAGEO
RTT03153JTP	RALEC
RC0603JR-0715KL	YAGEO
RC1608J153CS	SAMSUNG
RTT03183JTP	RALEC
RC0603JR-0718KL	YAGEO
RC1608J183CS	SAMSUNG
RC1608J184CS	SAMSUNG
RTT03184JTP	RALEC
RC0603JR-07180KL	YAGEO
RC1608J203CS	SAMSUNG
RTT03203JTP	RALEC
RC0603JR-0720KL	YAGEO
RTT03204JTP	RALEC
RC0603JR-07200KL	YAGEO
RC1608J204CS	SAMSUNG
RTT03220JTP	RALEC
RC0603JR-0722RL	YAGEO
RC1608J220CS	SAMSUNG
RTT03221JTP	RALEC
RC0603JR-07220RL	YAGEO
RC1608J221CS	SAMSUNG
RC1608J222CS	SAMSUNG
RTT03222JTP	RALEC
RC0603JR-072K2L	YAGEO
RTT03243JTP	RALEC
RC0603JR-0724KL	YAGEO
RTT03244JTP	RALEC
RC0603JR-07240KL	YAGEO
RC1608J244CS	SAMSUNG

RTT03270JTP	RALEC
RC0603JR-0727RL	YAGEO
RC1608J270CS	SAMSUNG
RTT03272JTP	RALEC
RC0603JR-072K7L	YAGEO
RC1608J272CS	SAMSUNG
RTT03273JTP	RALEC
RC0603JR-0727KL	YAGEO
RC1608J273CS	SAMSUNG
RTT03332JTP	RALEC
RC0603JR-073K3L	YAGEO
RC1608J332CS	SAMSUNG
RTT03335JTP	RALEC
RC0603JR-073M3L	YAGEO
RC1608J335CS	SAMSUNG
RTT03470JTP	RALEC
RC0603JR-0747RL	YAGEO
RC1608J470CS	SAMSUNG
RTT03471JTP	RALEC
RC0603JR-07470RL	YAGEO
RC1608J471CS	SAMSUNG
RTT03472JTP	RALEC
RC0603JR-074K7L	YAGEO
RC1608J472CS	SAMSUNG
RTT03473JTP	RALEC
RC0603JR-0747KL	YAGEO
RC1608J473CS	SAMSUNG
RTT03475JTP	RALEC
RC0603JR-074M7L	YAGEO
RC1608J475CS	SAMSUNG
RTT03511JTP	RALEC
RC0603JR-07510RL	YAGEO
RC1608J511CS	SAMSUNG
RC1608J513CS	SAMSUNG
RTT03513JTP	RALEC
RC0603JR-0751KL	YAGEO
RTT03561JTP	RALEC
RC0603JR-07560RL	YAGEO
RC1608J561CS	SAMSUNG
RTT03562JTP	RALEC
RC0603JR-075K6L	YAGEO
RC0603JR-07560KL	YAGEO
RTT03564JTP	RALEC
RC1608J621CS	SAMSUNG
RTT03621JTP	RALEC
RC0603JR-07620RL	YAGEO
RTT03681JTP	RALEC
RC0603JR-07680RL	YAGEO
RC1608J681CS	SAMSUNG
RC1608J682CS	SAMSUNG
RTT03682JTP	RALEC
RC0603JR-076K8L	YAGEO
RTT03683JTP	RALEC
RC0603JR-0768KL	YAGEO

RC1608J683CS	SAMSUNG
RTT03823JTP	RALEC
RC0603JR-0782KL	YAGEO
RC1608J823CS	SAMSUNG
RC1608F1002CS	SAMSUNG
RTT031002FTP	RALEC
RC0603FR-0710KL	YAGEO
RC1608F1003CS	SAMSUNG
RTT031003FTP	RALEC
RC0603FR-07100KL	YAGEO
RTT031102FTP	RALEC
RC0603FR-0711KL	YAGEO
RTT031502FTP	RALEC
RC0603FR-0715KL	YAGEO
RC1608F153CS	SAMSUNG
RTT031503FTP	RALEC
RC0603FR-07150KL	YAGEO
RTT031823FTP	RALEC
RC0603FR-07182KL	YAGEO
RTT032003FTP	RALEC
RC0603FR-07200KL	YAGEO
RTT032743FTP	RALEC
RC0603FR-07274KL	YAGEO
RTT033323FTP	RALEC
RC0603FR-07332KL	YAGEO
RTT033921FTP	RALEC
RC0603FR-073K92L	YAGEO
RTT033922FTP	RALEC
RC0603FR-0739K2L	YAGEO
RTT034751FTP	RALEC
RC0603FR-074K75L	YAGEO
RTT034752FTP	RALEC
RC0603FR-0747K5L	YAGEO
0805B121K251CT	/NALSIN TECHNOLOGY
0805J2500121KXT	SYFER
CL10B103JB8NNND	SAMSUNG
0603B103J500CT	/NALSIN TECHNOLOGY
0603B103J500CG	/NALSIN TECHNOLOGY
06033C103JAT2A	AVX
06035A120JAT2A	AVX
CL10C120JB8NNNC	SAMSUNG
06035A181JAT2A	AVX
CL10C181JB8NNNC	SAMSUNG
C0603C221J5GAC7867	KEMET
CL10C221JA8NNNC	SAMSUNG
0603N221J500LT	/NALSIN TECHNOLOGY
06035A221JAT4A	AVX
CL10C221JB8NNND	SAMSUNG
06035A330JAT2A	AVX
CL10C330JB8NNNC	SAMSUNG
CL10C331JA8NNND	SAMSUNG
06035A331JAT4A	AVX

CL10C331JB8NNND	SAMSUNG
06035A470JAT4A	AVX
CL10C470JB8NNND	SAMSUNG

06035C103KAT2A	AVX
GRM188R71H103KA01D	MURATA
0603B103K500CT	WALSIN TECHNOLOGY
CL10B103KB8NNND	SAMSUNG
UMK107B103KZ-T	TAIYO YUDEN
CL10B103KB8NNNC	SAMSUNG
GRM188R71H104KA93J	MURATA
0603B104K500CG	WALSIN TECHNOLOGY
CL10B104KB8NNND	SAMSUNG

06033C222KAT2A	AVX
C0603C222K3RAC	KEMET
CL10B222KB8NNNC	SAMSUNG
CL10B222KB8NNND	SAMSUNG
GRM188R71C224KA01D	MURATA
CL10B224KO8NNND	SAMSUNG
0603YC224KAT2A	AVX
CL10B224KO8NNNC	SAMSUNG
06035C472KAT2A	AVX
CL10B472KB8NNNC	SAMSUNG
GRM188R71H472KA01D	MURATA
CL10B472KB8NNNC	SAMSUNG
GRM188R71H473KA61D	MURATA
CL10B473KB8NNND	SAMSUNG
CL10B473KB8NNNC	SAMSUNG
C0603C223M3RAC	KEMET
CL10B223KB8NNNC	SAMSUNG
06033C223MAT2A	AVX
06033C333KAT2A	AVX
GRM188R71E333KA01D	MURATA
CL10B102KB8NNND	SAMSUNG
CL10B102KB8NNNC	SAMSUNG
0603YG105ZAT2A	AVX
CL10F105ZO8NNNC	SAMSUNG
GRM188F51C105ZA01D	MURATA
CL10A225KQ8NNNC	SAMSUNG
06036D225KAT2A	AVX
GRM188R60J225KE19D	MURATA
1808JA250151MXTSP	SYFER
LS1808B151M302NTM	NOVACAP
16.0SMU4203030FUND-	JAUCH
AS-16.000-20-SMD-TR	RALTRON

R4.19-JTTCC/MG-LF	JAUCH
LM324DT	ST MICRO
LM358DR2G	ON SEMIC
LM358DT	ST MICRO
ULN2003ADR	TEX INST
ULN2003D1013TR	ST MICRO
U4082B-G	ATMEL
U4082B-MFLG3G	ATMEL
BU8872FS-E2	ROHM
GSD2004S-V-GS08	VISHAY
MMBD2004S-7-F	DIODES
RLS 4148 TE11A	ROHM
PMLL4148L 135	NXP (PHILIPS)
LL4148-GS18	VISHAY
RLS 4148 TE11	ROHM
1SS355TE-17	ROHM
DF04S-E3	VISHAY
DF04S-T	DIODES
RB160L-40-TE25	ROHM
B240-13-F	DIODES
MBRS240LT3G	ON SEMIC
SS33-R6	TAIWAN SEMI
SS33E3	VISHAY
MBRS330T3G	ON SEMIC
SMP100LC-270	ST MICRO
MMBTA42 T/R	NXP (PHILIPS)
MMBTA42-7-F	DIODES
MMBTA42LT1G	ON SEMIC
PMBTA42 T/R	NXP (PHILIPS)
LMBTA92LT1G	LRC
MMBTA92-7-F	DIODES
MMBTA92LT1G	ON SEMIC
PMBTA92 T/R	NXP (PHILIPS)
BC807-25,215	NXP (PHILIPS)
BC807-25-7-F	DIODES INC.
BC807-25LT1G	ON SEMIC
BC848C-7-F	DIODES INC.
BC848CMTF	FAIRCHILD
BC848CE6433	INFINEON
BCP52	FAIRCHILD
IRF7416TRPBF	IR
ZXM66P03N8TA	ZETEX
XP132A1545SRN	TOREX
SI4435DYTRPBF	IR
IRF7406TRPBF	IR
SI4435DDY-T1-GE3	VISHAY
MMBF170-7-F	DIODES INC.
PMBF170 T/R	NXP (PHILIPS)
FDC658AP	FAIRCHILD
FDC654P	FAIRCHILD
BSS123	FAIRCHILD
LP3982IMM-3.3/NOPB	NATIONAL
S-80827CLMA-B6MT1-G	SEIKO IN
XC61CC2702MRN	TOREX
R3111N272CTRF	RICOH

SBK 160808T-601Y-N	CHILISIN
P/N SDC104R-470N-LF	LMASTER ELECTRONICS
GSRH104R-470M03	GANG SONG
HK2125R47J-T	TAIYO YUDEN
KM2520MGC03	KINGBRIGHT
RF-RUS150TS-BC	REFOND
KP-3216SRC-PRV	KINGBRIGHT
KM2520SRC03	KINGBRIGHT
T491A106K010AT	KEMET
TCSVS1A106KACR	SAMSUNG
293D106X9010A2TE3	VISHAY
TAJA106K010RNJ	AVX
TCSCS1A106KACR	SAMSUNG
0603ZD105KAT2A	AVX
GRM188R61A105KA061	MURATA
CM105X5R105K10AT	KYOCERA
16CE100BS	SUNCON
EMVA160ADC101MF55	NIPPON CERAMIC
VE2-16V101MF55-R	LELON
16SS101MLC6.3X5.4EC	KJ
EEE0JA470SR	PANASONIC
6.3CE47BS	SUNCON
ACE470M6.3V5X5.5TR1	NIC COMP
6.3SS470MLC5X5.4EC	KJ
M16ME1000WGBR	SUNCON
CH87102H200	CVILUX
TST-105-04-T-D-RA	SAMTEC
TS-13-PQY-G	SWITRONIC
DTSM-644NVT/R	DIPTRONICS
IBC-113-D-02-GT-V-TR-I	MAJOR LEAGUE
LE-113-02-G-DV-BE-P-T	SAMTEC
CH31082M100-0P	CVILUX
RTT061211FTP	RALEC
RC1206FR-071K21L	YAGEO
RK73H2BTTD1211F	KOA
RTT0620R0FTP	RALEC
RC1206FR-0720RL	YAGEO
RK73H2BTTD20R0F	KOA
0805PC682KAT1A	AVX
C0805C682KARACTU	KEMET
GRM21AR72E682KW01	MURATA
CL10B102KC8NNNC	SAMSUNG
06031C102KAT2A	AVX
C0603C102K1RAC	KEMET
0603J1000102KXT	SYFER
CL21B153KCCNNNC	SAMSUNG
08051C153KAT2A	AVX
C0805C153K1RAC	KEMET
GRM21BR72A153KA01	MURATA
CL10B472KC8NNNC	SAMSUNG
06031C472KAT2A	AVX
C0603C472K1RAC	KEMET
VJ0603Y472KXBAT	VISHAY

C0603C272K1RAC7867	KEMET
0603J1000272KXT	SYFER
CL10B272KC8NNNC	SAMSUNG
VJ0603Y272KXBAT	VISHAY
0603B272K101CT	/ALSIN TECHNOLOGY
1210YD226MAT2A	AVX
GRM32ER61C226ME20l	MURATA
C1210C226M4PAC	KEMET
C3225X5R1C226MT0SDI	TDK
1812L150/12	LITTELFUSE
SMD1812P150TF/12	POLYTRON
M24512-W-MN6TP	ST MICRO
MC34063ADR2G	ON SEMIC
MC34063ACD-TR	ST MICRO
MC34063AD	FAIRCHILD
MC34063ECD-TR	ST MICRO
TLV1117CKVURG3	TI
LM1117DTX-ADJ/NOPB	NATIONAL
NCP1117DTARKG	ON SEMIC
IA3222B-F-FTR	SILICON LABS
IA3223-C-FUR	SILICON LABS
R5F3650ENFA	RENESAS
NC7S32P5X	FAIRCHILD
74HC1G32GW 125	NXP (PHILIPS)
74V1G32CTR	ST MICRO
HK2125R10J-T	TAIYO YUDEN
PBJ160808T-601Y-N	CHILISIN

FBMJ3216HS800-T	TAIYO YUDEN
KP-3216QBC-C	KINGBRIGHT
RF-BNS150TS-CC	REFOND
KM2520SYC03	KINGBRIGHT
C15GTA (B72500D0150	EPCOS
8-302992	FAST PRINT
NCP2820FCT1G	ON SEMIC
RC0603JR-07150RL	YAGEO
RC1608J151CS	SAMSUNG
RTT03151JTP	RALEC
RTT03000JTP	RALEC
RC0603JR-070RL	YAGEO
RC1608J000CS	SAMSUNG
RTT02000JTP	RALEC
RC0402JR-070RL	YAGEO
RC1005J000CS	SAMSUNG
RTT02103JTP	RALEC
RC0402JR-0710KL	YAGEO
RTT02104JTP	RALEC
RC0402JR-07100KL	YAGEO
RTT02184JTP	RALEC
RC0402JR-07180KL	YAGEO
RC1005J184CS	SAMSUNG
RTT02221JTP	RALEC

RC0402JR-07220RL	YAGEO
RTT02331JTP	RALEC
RC0402JR-07330RL	YAGEO
RC1005J331CS	SAMSUNG
RTT02390JTP	RALEC
RC0402JR-0739RL	YAGEO
RTT02563JTP	RALEC
RC0402JR-0756KL	YAGEO
GRM1555C1H1R2JZ01D	MURATA
GRM1555C1H6R8BZ01D	MURATA
GRM1555C1H6R8GZ01D	MURATA
CL05B103KA5NNND	SAMSUNG
CL05B103KB5NNND	SAMSUNG
GRM155R71H103KA88J	MURATA
CL05B104KO5NNND	SAMSUNG
CL05B104KO5NNNC	SAMSUNG
GRM155R71C104KA88D	MURATA
GRM1555C1H120JZ01D	MURATA
CL05C120JB5NNNC	SAMSUNG
GRM1555C1H220JZ01D	MURATA
CL05C221JB5NNND	SAMSUNG
CL05C221JB5NNNC	SAMSUNG
GRM1555C1H221JA01D	MURATA
CL05C270JB5NNND	SAMSUNG
GRM1555C1H270JZ01D	MURATA
CL05C270JB5NNNC	SAMSUNG
0402N331J500LT	WALSIN TECHNOLOGY
C0402C331J5GAC7867	KEMET
CL05C331JB5NNNC	SAMSUNG
GRM1555C1H331JA01D	MURATA
CL05C470JB5NNNC	SAMSUNG
GRM1555C1H470JZ01D	MURATA
0402B473K160CG	WALSIN TECHNOLOGY
CL05B473KP5NNND	SAMSUNG
CL05B473KO5NNND	SAMSUNG
GRM155R71C473KA01J	MURATA
RB551V-30-TE-17	ROHM
B0530WS-7-F	DIODES
B0530WS RR	TAIWAN SEMI
BC848CW7F	DIODES
BC848CW H6327	INFINEON
BC848BWT1G	ON SEMIC
UPG2214TB-E4-A	RENESAS
SBK201209T-601Y-N	CHILISIN
LQG15HN18NJ02D	MURATA
LQG15HN33NJ02D	MURATA
LQG15HNR10J02D	MURATA
LQG15HN4N7S02D	MURATA
GRM155R60J105KE19D	MURATA
CL05A105KQ5NNNC	SAMSUNG
04026D105KAT2A	AVX
CL05C3R9BB5NNNC	SAMSUNG
GRM1555C1H3R9BZ01D	MURATA
CL05B102KB5NNNC	SAMSUNG

0402B102K500CT	WALSIN TECHNOLOGY
CL05B102KB5NNND	SAMSUNG
50981	CTS
PT2HA-26.000MLF/TR/A	NEW CRYSTAL WORLD
NFL21SP106X1C3D	MURATA
B39321-B3731-H110	EPCOS
CC1101RTKR	TI
PIC16F690T-I/SS	MICROCHIP
B10TGLC	COILCRAFT
LQG15HN22NJ02D	MURATA
LQG15HN68NJ02D	MURATA
1812SMS-56NGLC	COILCRAFT
BFU725F/N1,115	NXP (PHILIPS)
H-301207	SUDTECH
H-301207	L LAM METAL & ELECTRON
H-300538	SUDTECH
H-300538	L LAM METAL & ELECTRON
H-300837	AN SPRING & METAL MFG
8-301316	MELTA
8-301316	DICKSON
PC-122U	CHIMEI
K-30FR	KOTEC
MD00131	TOSAF
3XPCKD009540	KAFRIT
PC-122U	CHIMEI
K-30FR	KOTEC
MD00131	TOSAF
3XPCKD009540	KAFRIT
PA765B H08704B6	CHIMEI
PA765B H08704B6	CHIMEI
PA765B H08704B6	CHIMEI
PA-757-A93548B5	CHIMEI
PA765B H08704B6	CHIMEI
PA-757-A93548B5	CHIMEI
PC-122U	CHIMEI
K-30FR	KOTEC
V8679I791A1S	NORTEC
PA 757	CHIMEI
PA 7578Q175051	BORA
MB10741	TOSAF

PA765B A08705B6	CHIMEI
VH-0815 W92905	SAMSUNG
PA 757	CHIMEI
PA 7578Q175051	BORA
MB10741	TOSAF
PA 757	CHIMEI
PA 7578Q175051	BORA
MB10741	TOSAF
PA 757	CHIMEI
PA 7578Q175051	BORA
MB10741	TOSAF
H-300615	HAKFIZ
KQ100267	AVIV C&EMS
YD87-2B/F-8W100C06-G	AAC ELEC
YD87-2B/F-8W100C06-LI	AAC ELEC
/N1412-KA 30X10 Z BLU	HABOREG
BN 13577 30X10	ALKA
/N1412-KA 30X10 Z BLU	EJOT
DT3902210	PALBOREG
XCM9765-Z334R	SPL
OM9765JF342C-02	SOUND COMPONENTS
221-55	SANTOPRE
LS9500M	TOSAF
130AAM6BMX	GP
103WP5	NORTEC
V7359I711A5Z	NORTEC
PA 757	CHIMEI
PA 7578Q175051	BORA
MB11925	TOSAF
/N1412-KA 30X10 Z BLU	HABOREG
BN 13577 30X10	ALKA
/N1412-KA 30X10 Z BLU	EJOT
8P4C-6P4C-2160MM	AMTEK
QH-07T00003	CVILUX

VIS-100	UPO TECH
CR2032	SANYO
SKRPACE010	ALPS
45900150	SUDTECH
45900160	SUDTECH
RTT024R7JTP	RALEC
RC0402JR-074R7L	YAGEO
RTT02103JTP	RALEC
RC0402JR-0710KL	YAGEO
RTT02104JTP	RALEC
RC0402JR-07100KL	YAGEO
RTT02105JTP	RALEC
RC0402JR-071ML	YAGEO
RC1005J105CS	SAMSUNG
RTT02183JTP	RALEC
RC0402JR-0718KL	YAGEO
RTT02205JTP	RALEC
RC0402JR-072ML	YAGEO
RTT02392JTP	RALEC
RC0402JR-073K9L	YAGEO
RC1005J392CS	SAMSUNG
RTT02393JTP	RALEC
RC0402JR-0739KL	YAGEO
RTT02680JTP	RALEC
RC0402JR-0768RL	YAGEO
RC1005J681CS	SAMSUNG
RTT02681JTP	RALEC
RC0402JR-07680RL	YAGEO
RTT02682JTP	RALEC
RC0402JR-076K8L	YAGEO
GRM219R60J475KE01D	MURATA
08056D475KAT2A	AVX
GRM1555C1H1R2JZ01D	MURATA
GRM1555C1H3R3GZ01D	MURATA
0402N100J500LT	WALSIN TECHNOLOGY
CL05C100JB5NNNC	SAMSUNG
GRM1555C1H100JZ01D	MURATA
CL05C101JB5NNND	SAMSUNG
CL05C101JB5NNNC	SAMSUNG
GRM1555C1H101JZ01D	MURATA
CL05B103KA5NNND	SAMSUNG
CL05B103KB5NNND	SAMSUNG
GRM155R71H103KA88J	MURATA
CL05C150JB5NNND	SAMSUNG
GRM1555C1H150JZ01D	MURATA
CL05C150JB5NNNC	SAMSUNG
GRM1555C1H220JZ01D	MURATA
1SS355TE-17	ROHM
B0520LW-7-F	DIODES INC.
MBR0520LT1G	ON SEMIC
SI1913DH-T1-E3	VISHAY

BC848CW7F	DIODES
BC848CW H6327	INFINEON
BC848BWT1G	ON SEMIC
NE85619-T1-A	NEC/TOKIN
2SC5006-T1-A	RENESAS
LQW18ANR10J00D	MURATA
LQG15HN12NJ02D	MURATA
LQG15HN18NJ02D	MURATA
LQG15HN47NJ02D	MURATA
LQG15HNR10J02D	MURATA
RF-RUS150TS-BC	REFOND
KP-3216SRC-PRV	KINGBRIGHT
T491A106K010AT	KEMET
TCSVS1A106KACR	SAMSUNG
293D106X9010A2TE3	VISHAY
TAJA106K010RNJ	AVX
TCSCS1A106KACR	SAMSUNG
293D226X96R3A2TE3	VISHAY
TCSCS0J226KACR	SAMSUNG
CL05C3R9BB5NNNC	SAMSUNG
GRM1555C1H3R9BZ01D	MURATA
CL05C5R6BB5NNNC	SAMSUNG
GRM1555C1H5R6BZ01D	MURATA
GARCC315M00KXL0R12	MURATA
NCP1402SN27T1G	ON SEMIC
XC61CC1802MRN	TOREX
R3111N182C-TR-F	RICOH
S-80818CLMA-B6DT1G	SEIKO
PIC16F506T-I/ST	MICROCHIP
SR0403470KLB	ABC TAIW
SDR43-470K-LF	ILMASTER ELECTRONICS
GS43-470K	GANG SONG
8-302938	FAST PRINT
S-0001-D	דנגוט מחשבים בע'מ
V7390I714A10S	NORTEC
SDF-178S	SUDTECH
PA-757-A93548B5	CHIMEI
DL-1204101	די-אל דב
PA-757-A93548B5	CHIMEI
ME43855	TOSAF
221-55	SANTOPRE
TR 558A; COLOR-NP	LG PLAST
PA-758	CHIMEI
PA-757-A93548B5	CHIMEI
V6875I708A10Z	NORTEC

09036A	TOSAF
?ETROTHENE GA56418	DELL CHEMICAL COMPANY

09036A	TOSAF
?ETROTHENE GA56418	DELL CHEMICAL COMPANY
PA004040	SUDTECH

PA004601	SUDTECH
V6875I708A10Z	NORTEC
V8982I744A1.5Z	NORTEC
74011110020	TADBIK
OH-41111AT-2	HERO ORI